GENERAL ARRANGEMENT

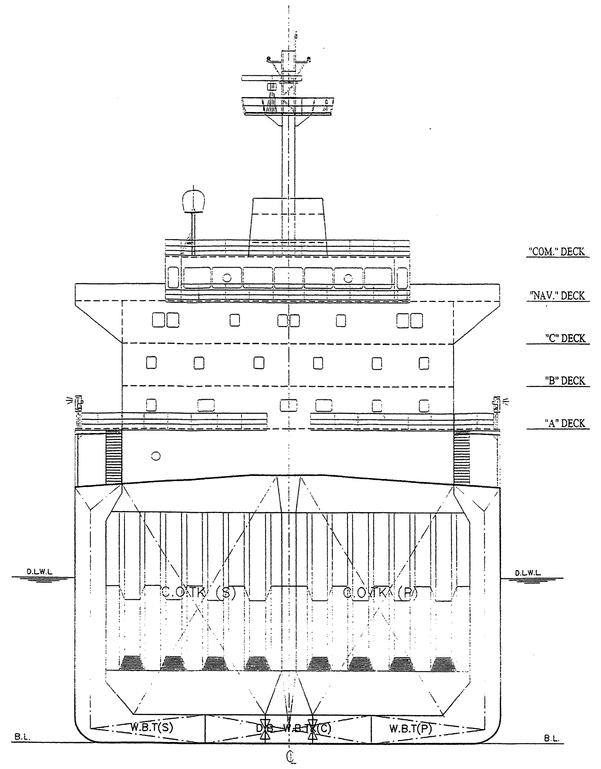

MIDSHIP SECTION

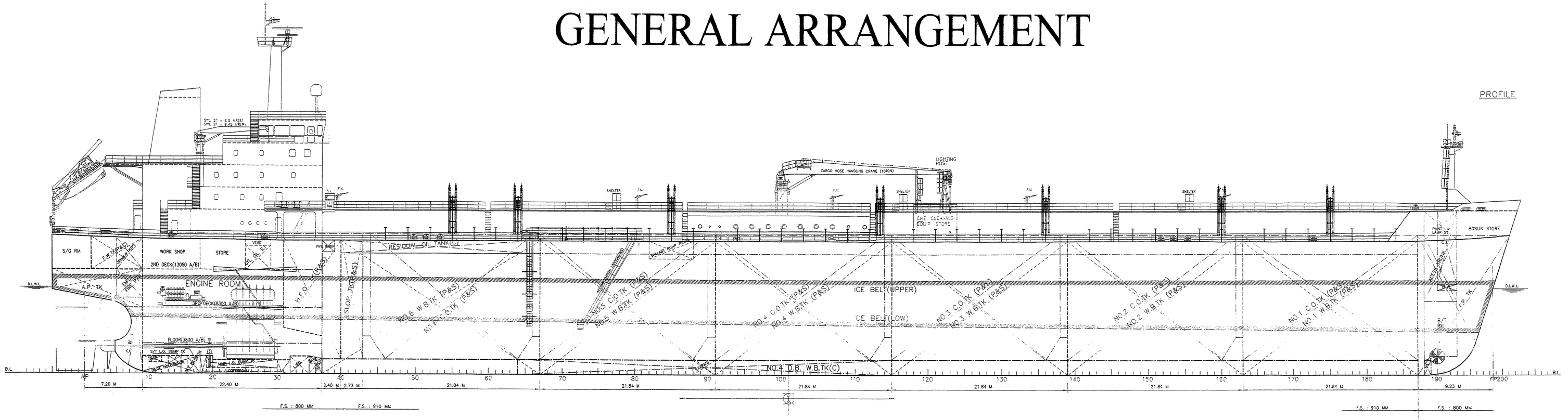

PROFILE

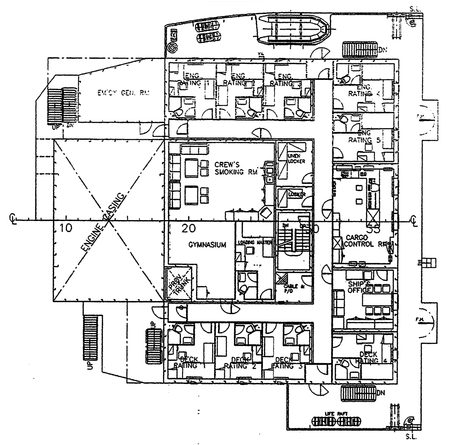

"A" DECK

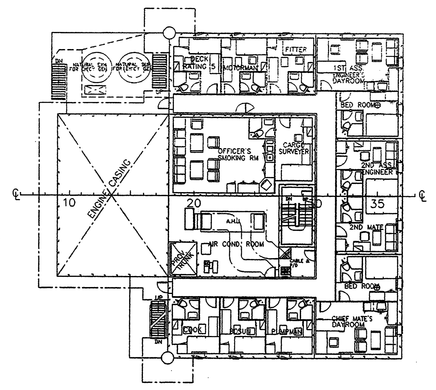

"B" DECK

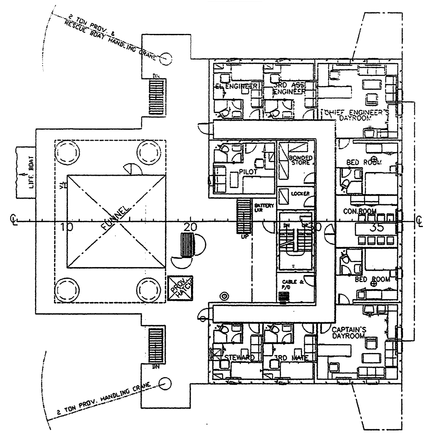

"C" DECK

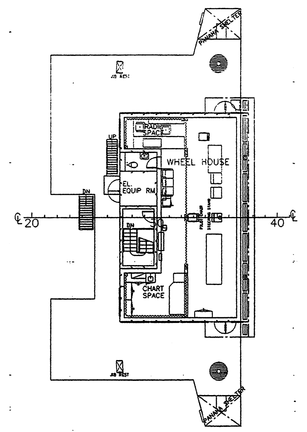

"NAV." DECK

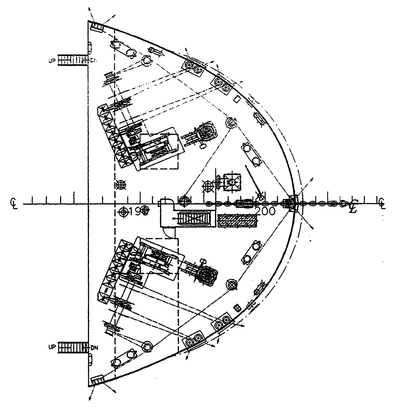

"FCLE" DECK

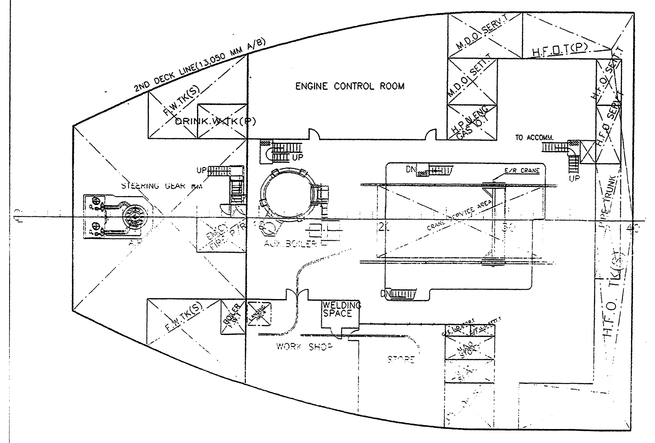

"E/R 2ND" DECK

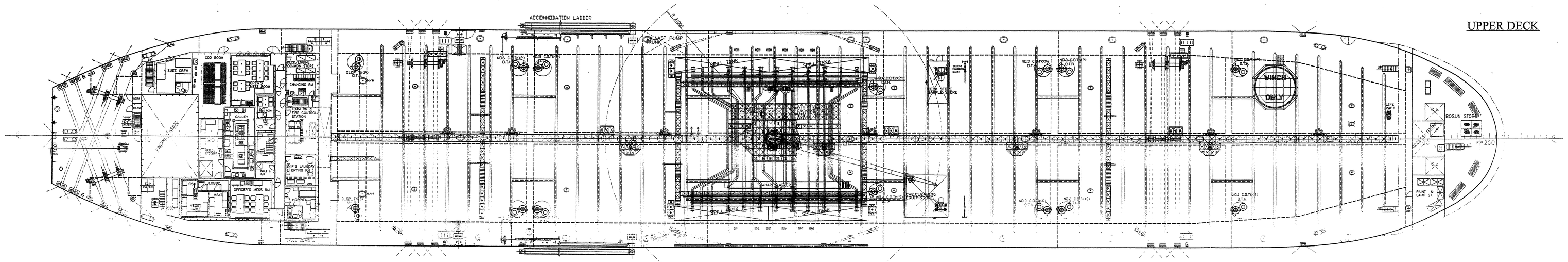

UPPER DECK

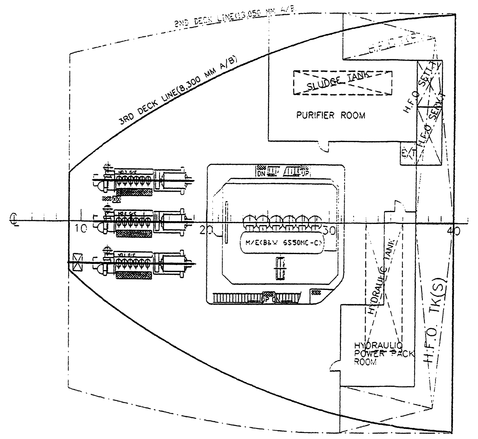

"E/R 3RD" DECK

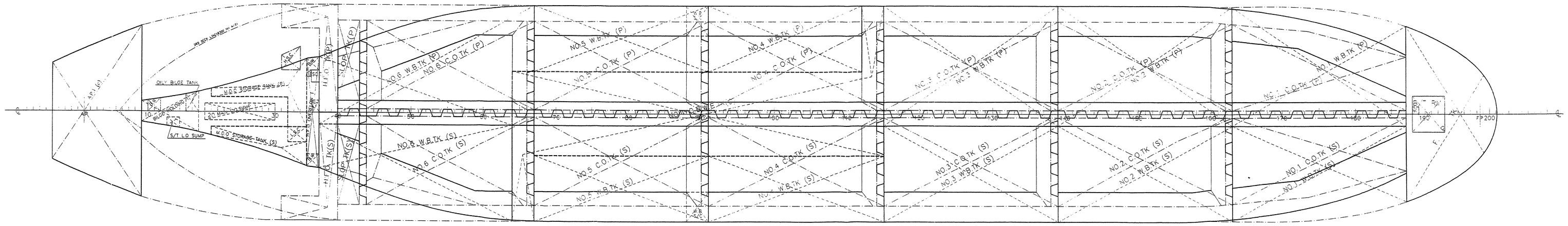

TANK TOP PLAN

PLAN HISTORY

DATE	REV	MARK	DESCRIPTION	CHECKED BY
DEC. 17 2003	ORI		Following items are changed from HMD 2143 (according to the meeting memorandum(SEM-1026) dated Oct. 16. 2003) and fore design development 1) The fore end aft end of No.4 D.B.W.B.TK(C) extended to the above due having shell into casing 2) Changes E/R after BHD boundary from step shape to vertical BHD vertically at FR5 - S.T.C.V.T : fr+19 ~ fr+22 ~~> fr+19 ~ fr+9 - Bilge Holding TK : fr+22 ~ fr+18 ~~> fr+9 ~ fr+18 - Deleted Grating in way of the D/G (Dwg. 1A20M0D1) 3) Modified deck height(hw. bridge deck to compass deck) from 2.65m to 2.85m according to Dwg. 2A000A060 4) Updated manhole arr't according to Dwg. 2A000H003 - Moved F.P.Tk manhole from fr:190~400m to fr:188~470m - Moved H.F.O.TK(P) from fr:38~250m to fr:35~400m - Modified the No.4 D.B.W.B.TK(C) manhole 5) Changed hopper one in way of cargo tank due to modify of block division (Dwg. 8A000H02) 6) Updated Accommodation plan(Dwg. 2A8000D01)(1/2) - Modified the platform arr't on aft part (3 & 1 deck) - Improved furniture arrangement - Modified the door & window 7) Updated Arr't of outfitting on upper deck(Dwg.3A500F001) - Revised the lighting post. - Revised the end shapes of walkway from extension type to straight type 8) Updated Arr't of outfitting on foregn (Dwg.3A600F001) - Moved the access hatch for P/T at stan part. - Modified 8w22 search light platform	

PRINCIPAL PARTICULARS

LENGTH	O.A.	abt. 182.55 M
LENGTH	B.P.	175.00 M
BREADTH	MLD.	27.34 M
DEPTH	MLD.	16.70 M
DESIGN	M.L.D.(DESIGN)	10.85 M
	M.L.D.(SCANTLING)	11.20 M
	EXT.(SCANTLING)	11.217 M

MAIN ENGINE TYPE : HYUNDAI-B&W 6S50MC-C
MCR : 12,900 BHP X 127.0 RPM
NCR : 10,965 BHP X 120.3 RPM

SERVICE SPEED AT DESIGN DRAFT (NCR WITH 15% S.M) Abt. 14.50 KNOTS

CLASSIFICATION
DNV, +1A1, TANKER FOR OIL AND CHEMICALS ESP, SHIP TYPE3, EO, ICE-1B, VCS-2

FLAG LIBERIA

FREEBOARD TYPE A

COMPLEMENT 28 + E P

SEC.NO 5610	DESIGN OFFICE BASIC DESING DEPT	SHIP TYPE	37,000 DWT. PRODUCT / CHEMICAL TANKER
TEL.NO 3759	SHIP NO. 0378/0379	SHIP NAME	
DATE Dec. 10. 2003	APPROVED J. J. PARK	NAME OF DRAWING	GENERAL ARRANGEMENT
	CHECKED S. K. LEE		
	J. B. LEE		
	DRAWN Y. C. HYUN	SCALE 1/200	DRAWING NO 1A000B001 / REV. NO ORI
HYUNDAI HMD HYUNDAI MIPO DOCKYARD CO., LTD. ULSAN KOREA		CONSOLIDATED	