GENERAL ARRANGEMENT

REMARKS

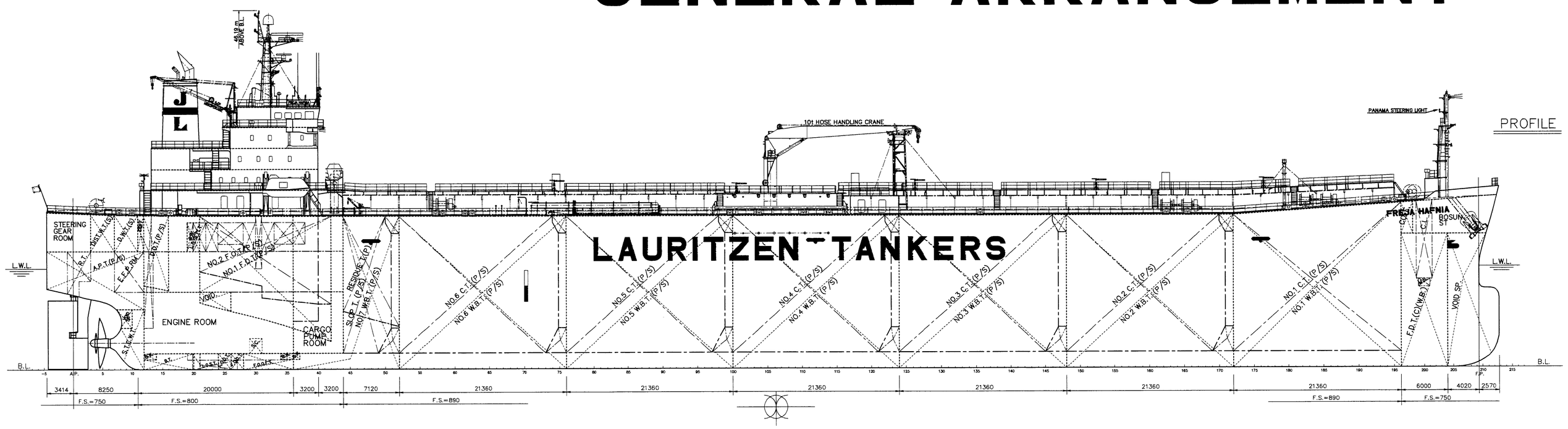

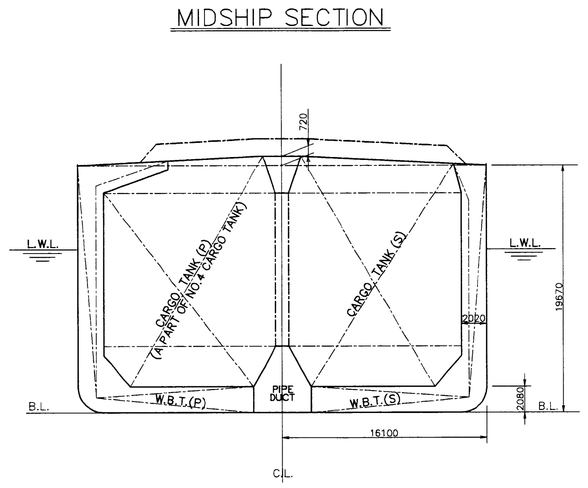

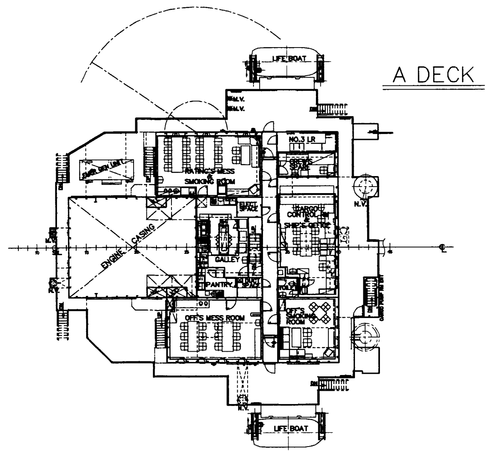

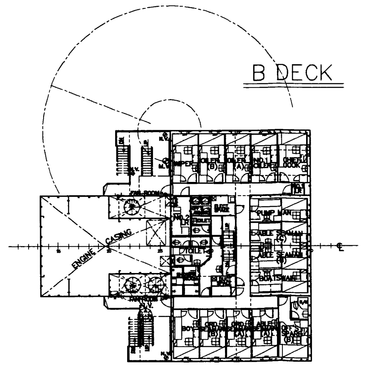

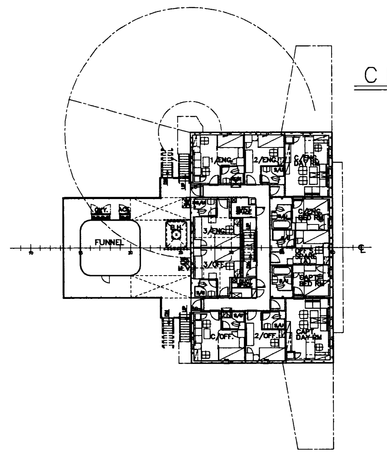

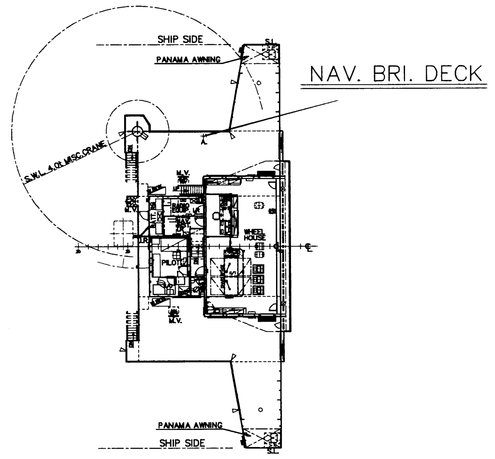

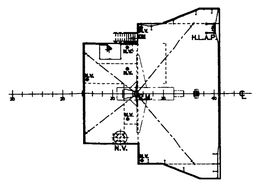

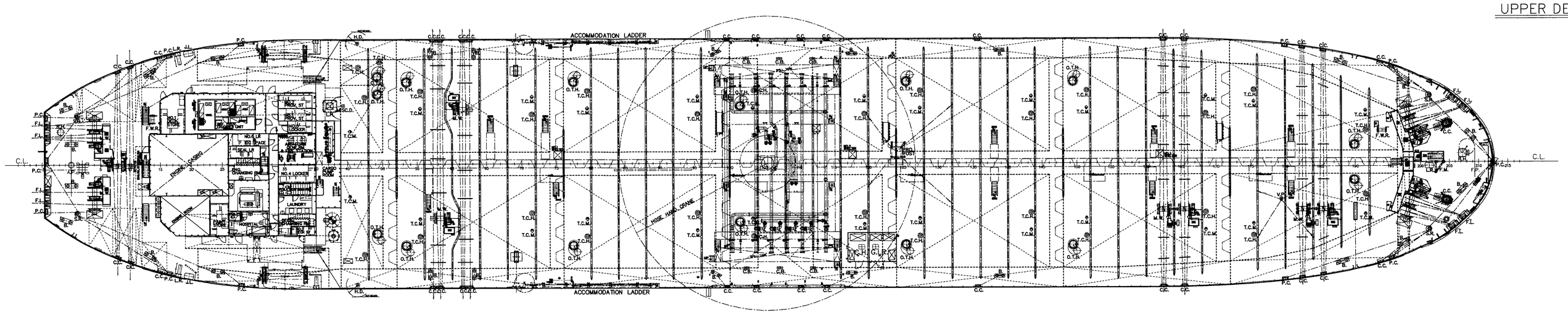

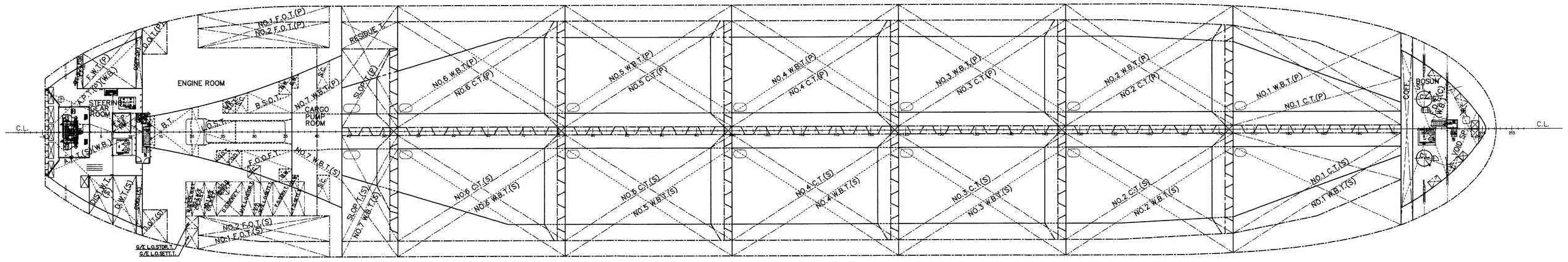

PRINCIPAL PARTICULARS

LENGTH (O.A.)	185.93 M
LENGTH (P.P.)	179.95 M
BREADTH (MLD)	32.20 M
DEPTH (MLD)	19.67 M
DRAFT (SUMMER EXT.)	13.025 M
DEADWEIGHT	53712 t
GROSS TONNAGE	31433
MAIN ENGINE	1 SET OF 6UEC 60LS
M.C.O.	10620 kW (14440 PS) x 100 min^{-1}
SERVICE SPEED	about 15.75 KNOTS
CLASSIFICATION	
NK	NS* (Tanker, Oils–Flashpoint on and below 60℃)
(ESP)	MNS* MC

This document(drawing)is the PROPERTY of SHIN KURUSHIMA DOCKYARD CO.,Ltd. and is confidential.
In this connection, please kindly observe the followings.
It shall not be traced, nor copied, nor used for any other purpose, nor communicated to any third party without prior permission.
この書類(図面)は、当社の企業秘密に属するものであり、当には当社が著作権を有しているものであります。無断複製を禁じ、また、その目的、には十分ご注意下さい。
株式会社 新来島どっく

秘

FREJA HAFNIA

SNO.5360

GENERAL ARRANGEMENT

— FINISHED PLAN —

LIST NO. C– 3

IMO NO.	9311036
GENERAL MANAGER	K. Yoshida
ASST.G. MANAGER	T. Miyoshi
MANAGER	K. Hayashi
ASST. MANAGER	M. Miura
STAFF	
DRAWN	K. Shigemitsu

SHIN KURUSHIMA DOCKYARD CO.,LTD.
EHIME JAPAN
ENGINEERING DIV.

DATE	2006/2/7	DWG. NO.	
SCALE	1/250		

SHIN KURUSHIMA DOCKYARD CO.,LTD. ENG DIV 10.FEB.2006 株式会社新来島どっく

図面寸法 (A0)1148 × 841
原稿寸法 (A0)1189 × 841